Current Developments in DETER Cybersecurity Testbed Technology

Terry V. Benzel – Presenter
CATCH 2009 Conference – March 4, 2009

Terry Benzel*, Bob Braden*, Ted Faber*, Jelena Mirkovic*, Steve Schwab†, Karen R. Sollins+, and John T. Wroclawski*

**USC Information Sciences Institute*
†Cobham, Inc
+MIT Computer Science and Artificial Intelligence Laboratory

Talk Outline

Today's DETER Testbed

Key New Research and Development:

- Dynamic Federation
- Experiment Health Support
- Risky Experiment Management

Next Generation Capabilities

DETERlab: The DETER Facility

- Cyber Security testbed located at USC/ISI and UC Berkeley
  - Funded by NSF and DHS, started in 2003
  - 400 Nodes - 200 each at ISI and UC Berkeley
  - Based on Emulab software, with focus on security experimentation
- The DETER testbed infrastructure
  - Tool libraries
  - SEER workbench
  - Operations and Management
  - Community building and Outreach

Why DETER?

- Lack of experimental infrastructure for cyber-security research
  - Medium-scale, e.g., 100's of nodes, 1 Gbps links.
  - Open facility, researcher- and vendor neutral.
- Lack of effective tools and methodologies to foster rigorous and effective evaluation
  - Repository of test data, test topologies, traffic, and metrics.
  - Foster good science in cyber-security area.

DETER Testbed: Attributes

- Shareable – concurrent “logical testbeds”
- Isolation of “logical testbeds” (experiments)
- Flexible – full access to bare hardware
- Rapidly configurable
- Remotely accessible to (non-local experimenters)
- Security, and safety for “risky” experiments

DETER Testbed - Cluster Architecture

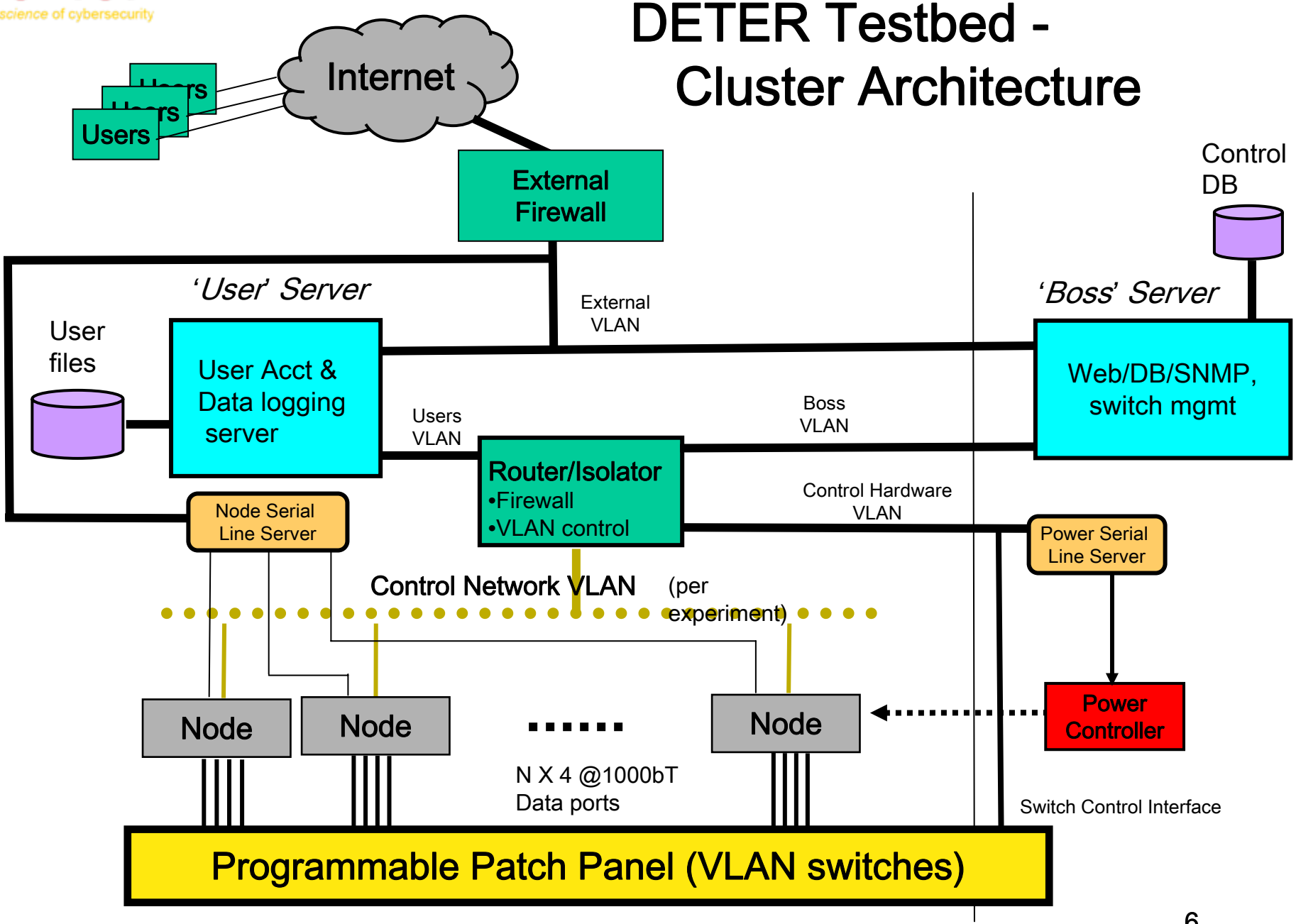

DETER Testbed – Inter-cluster Architecture

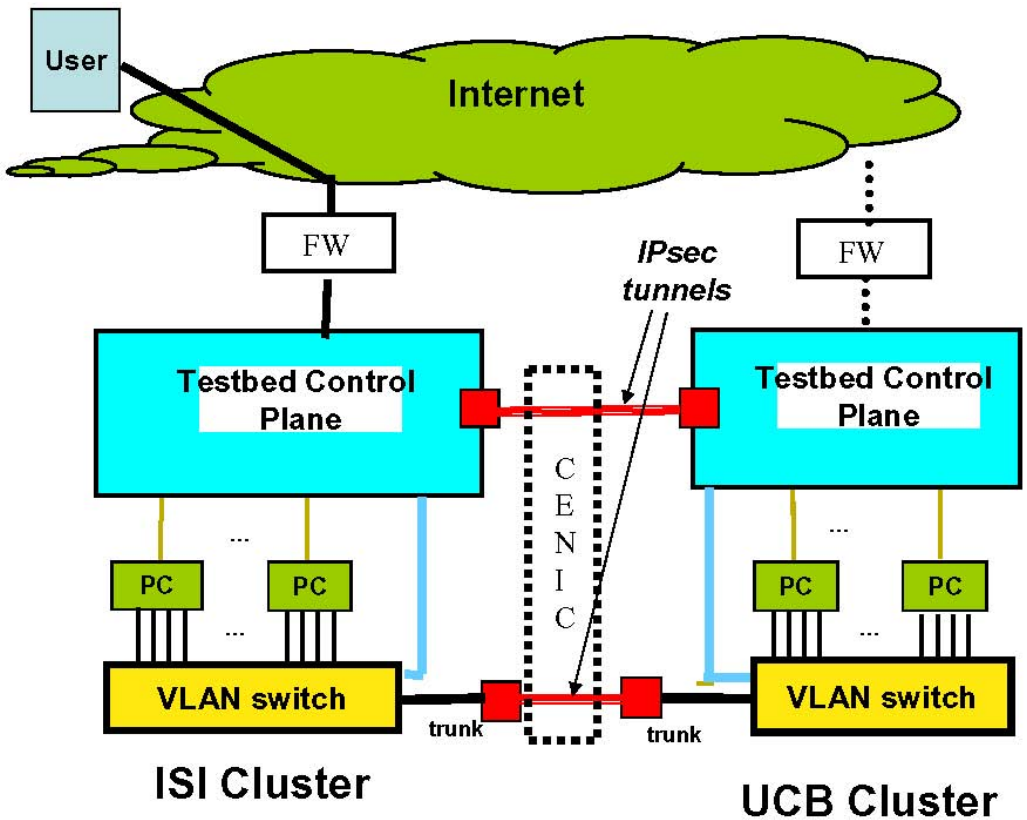

Testbed comprises:

- A number of *clusters*
- Interconnected by *secure tunnels,* using
- Shared or separate *physical networks*

Experiment Methodology and the SEER Facility

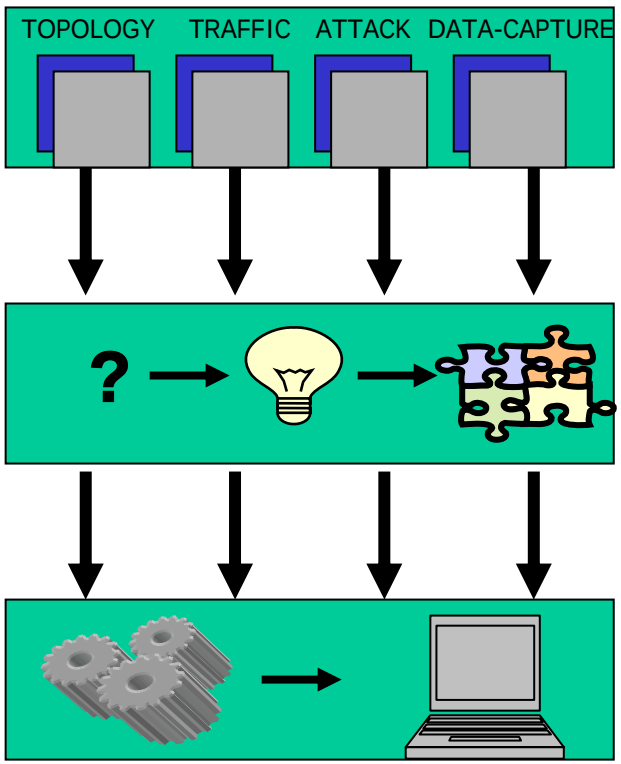

PALETTES

METHODOLOGY & GUIDANCE

EXPERIMENT AUTOMATION

- *Palettes* capture high-level "design patterns" for well-formed experiments: Topology, Background and Attack Traffic, and Packet Capture and Instrumentation. Skeleton palettes for original and customized experiments are also available.
- *Methodology Engine* frames standard, systematic questions that guide an experimenter in selecting and combining the right elements.
- *Experiment Automation* increases repeatability and efficiency by integrating the process to the DETER testbed environment.

SPARTA DDoS Experiment

Background Traffic:

REPLAY | NTCG | HARPOON

HIGH FIDELITY TRAFFIC

Topology:

BUILDING-BLOCKS |

JUNIPER ROUTER CORE

REALISTIC CONNECTIVITY AND SCALE-DOWN

Attack Traffic:

DETER-INTEGRATED ATTACK SCRIPTING

AUTOMATION OF VARIETY OF SCENARIOS UNDER STUDY

Instrumentation:

PACKET AND HOST STATISTICS CAPTURE | SPECTRAL ANALYSIS | METRICS CALCULATION | INTEGRATED VISUALIZATION

TOOLBOX FOR RIGOROUS INVESTIGATION OF RESULTS

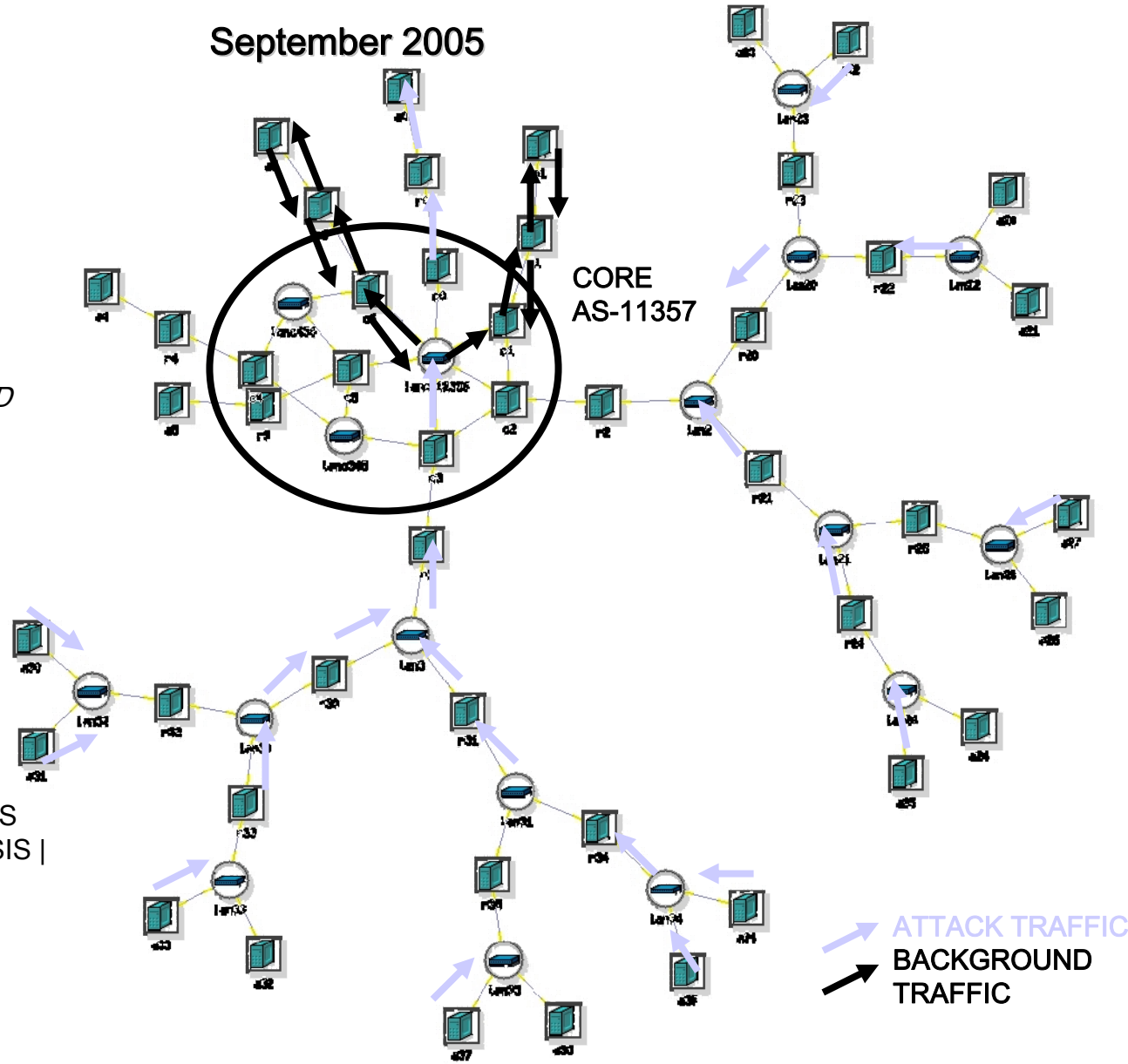

DETER Projects

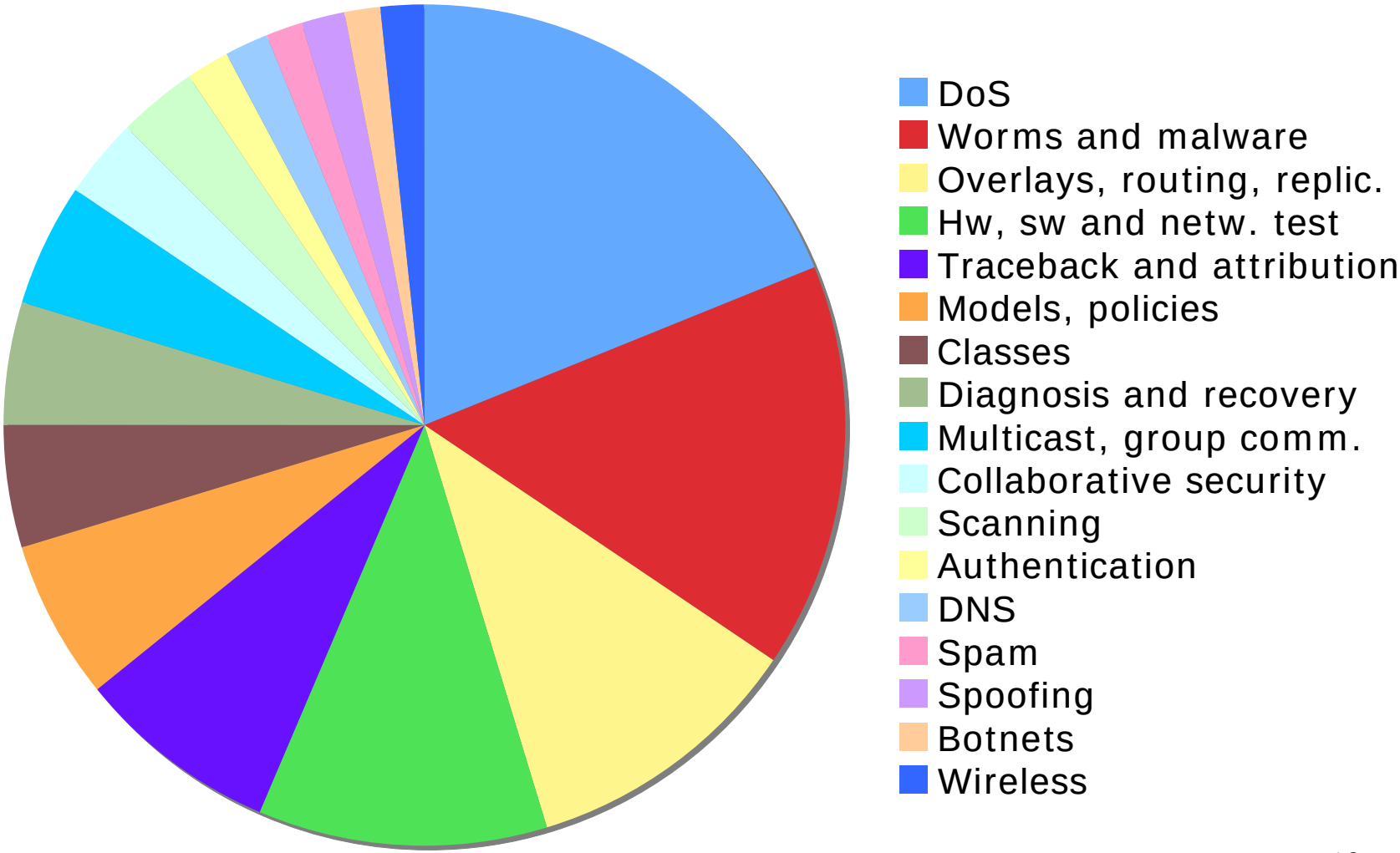

de•ter
the science of cybersecurity

DETER User Location Map

Vers: 4.160 Build: 01/21/2009 Fri Jan 30 12:34pm PST

677 users at 149 locations, 11 countries

de•ter
the science of cybersecurity

DETER Experimenters and User Organizations (representative)

Agnik
BBN Technologies
Bell Labs
Boeing Phantom Works
Columbia University
Cornell University
Cs3 Inc.
Dalhousie University
EADS Innovation Works
Federated Investors
Flux Group, University of Utah
Georgia State University
George Mason University
HP Labs
ICSI / LBNL
Indian Institute of Technology, Delhi
Intel Corporation
Information Sciences Institute
IntruGuard Devices, Inc.
IRTT
Juniper
Lehigh University
McAfee Research
National Cyber-Forensics and Training Alliance
National Institute for Communication Technology, Hokuriku Research Center, Japan
Naval Postgraduate School
Network Associates Laboratories
New Jersey Institute of Technology
Norfolk State University
Penn State University
Princeton University
Purdue University
Rutgers University
Sandia National Laboratories
Secure64 Software Corp
SPARTA, Inc.
SRI International
Telcordia Technologies
Technical University Berlin
The Aerospace Corporation
The SANS Institute
The Steganography Analysis and Research Center
UC Berkeley
UC Davis
UC Irvine
UC Santa Cruz
UC San Diego
Universita di Pisa
University of North Carolina at Chapel Hill
University of North Carolina at Charlotte
University of Delaware
University of Illinois, Urbana-Champaign
University of Maryland
University of Massachusetts
University of Southern California
University of Texas at Arlington
University of Texas at Austin
University of Wisconsin, Madison
Warrior LLC
Washington State University
Washington University in St. Louis
Western Michigan University

Beyond the Facility - Creating New Tools for Cyberscience

Federation -
Scale, realism, and decentralization

Dynamic Federation

- *On-demand* creation of experiments spanning *multiple*, *independently controlled* facilities

- *Why?*
  - Scale
  - Unusual facilities
  - Data & knowledge sharing
  - Information hiding - multiparty scenarios

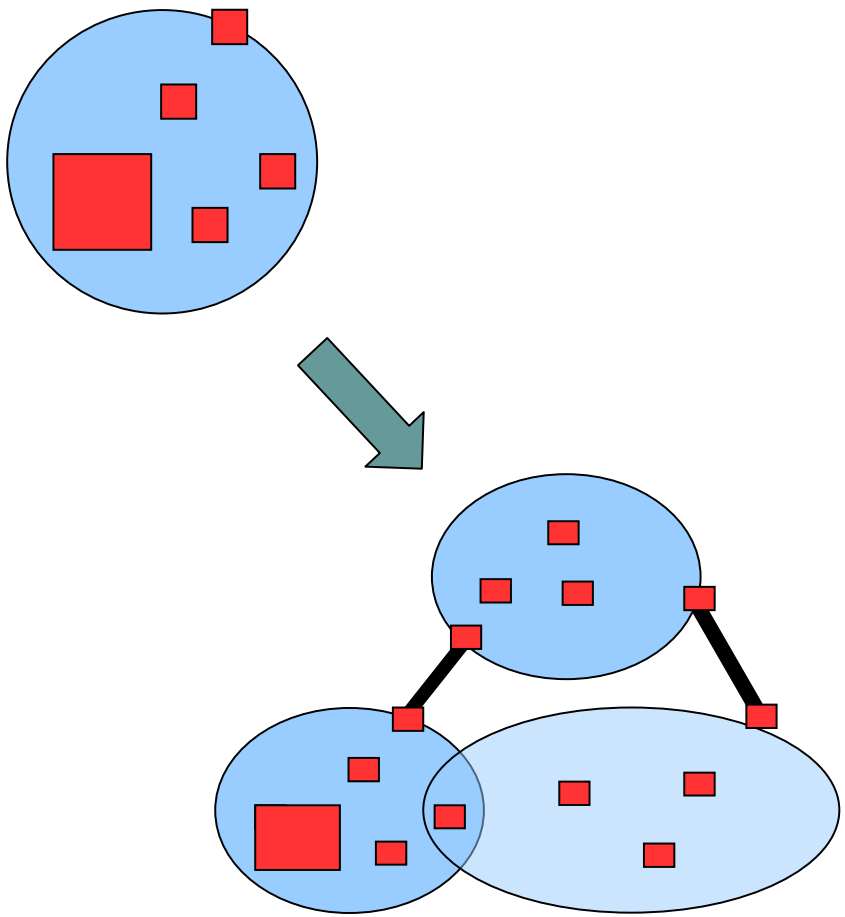

Elements of Federation

- Experiment decomposition
  - Creation and embedding of per-federant sub-experiments
- Trust, policy, and security analysis mechanisms
  - Manage federated resources within local policies
- Provide unified runtime environment to researcher and the experiment
  - Shared file system, scheduling and event system, control hooks, etc.
  - Failure management model
- Secure implementation mechanisms
  - Inter-facility communication, namespace mapping, etc.

DFA System Architecture

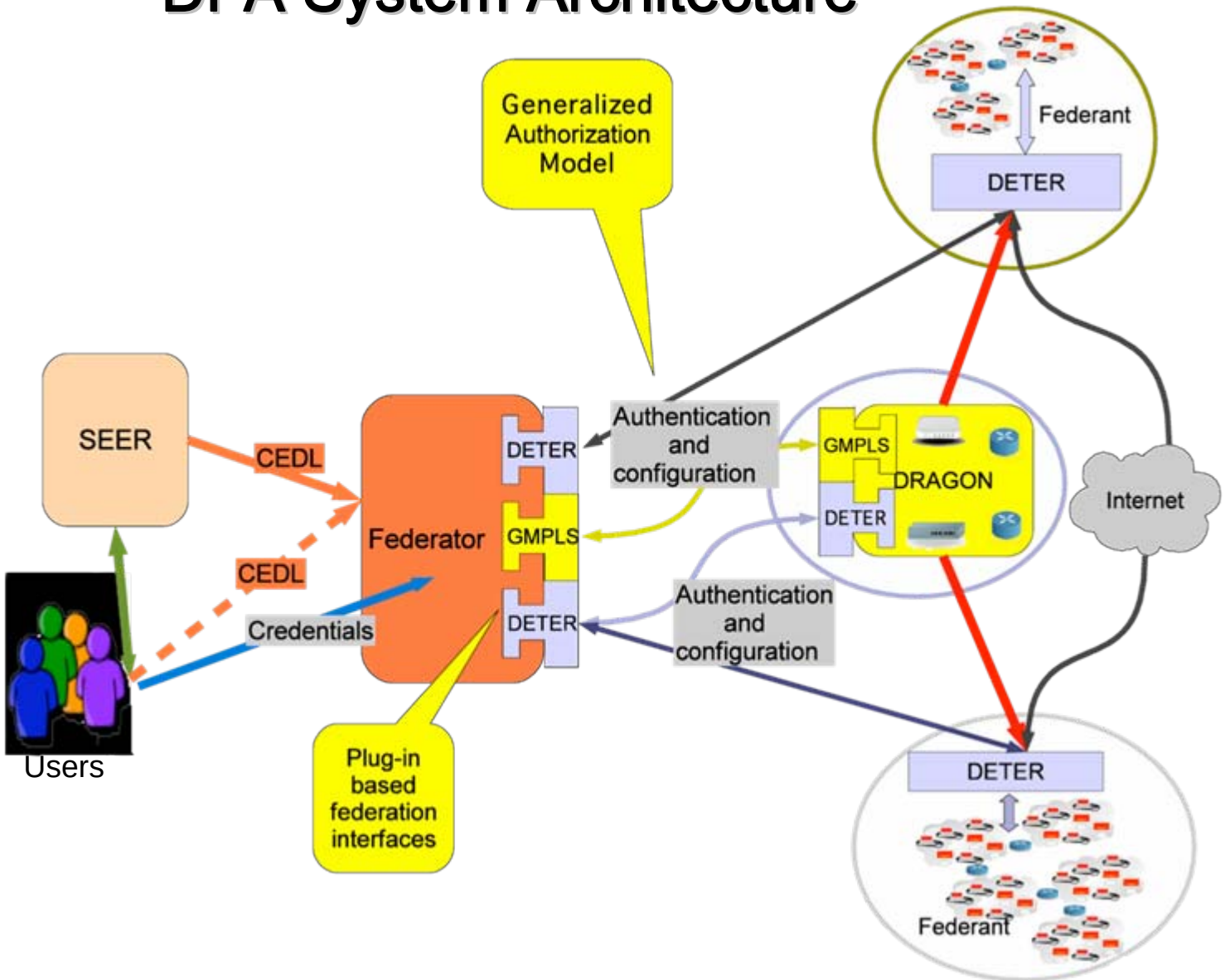

de•ter
the science of cybersecurity

Authorization for Dynamic Federated Testbed Environments

- Decentralized, collaborative/competitive environment. Alliances form/break frequently
  - Semantics appropriate for testbed federation
- Explicit, visible decision making
  - Corollary: clear auditing and understanding
- Multiple trust creation models, independent of mechanism
  - Examples: Hierarchical PKI, PGP web of trust, etc.
- Minimize unnecessary communication
  - For disconnected operation

Federation: Status

- Operating today
  - Hundreds of nodes
  - Emulab-based testbeds {DETER, WAIL, Emulab}
  - Simple / simplistic ID based authorization
  - Scale-limited: primarily by file system and event model
- Extending to
  - Full attribute-based auth/auth framework
  - Removal of scaling limitations
  - Richer resource discovery / integration with higher level tools
  - Additional testbed architectures
    - NSF GENI program
    - DRAGON

Experiment Health – Structured experiments and scientific rigor

de•ter
the science of cybersecurity

Maintaining Experiment Invariants: The DETER Experiment Health System

- Uses *higher level* knowledge about the experiment – the desired invariants
- Takes corrective or notification action if invariant is violated
  - Monitor invariants..
  - Trigger actions
- Captures invariants in exportable form for experiment reuse, repeatability and validation, etc.

Experiment Health: Benefits

- Sophisticated users benefit in case of large-scale or batch experiments
  - Very difficult to monitor these manually or to discover problems in a large result set
- Novice users always benefit, but especially when re-running somebody else's code (e.g., students)
  - Early signal that something is wrong motivates understanding of experimentation mechanism

Experiment Health System: Design Goals

- Support an open-ended set of expectations
  - Internal (traffic generator output)
  - External (verifying node status)
- On expectation failure, execute arbitrary recovery actions
  - Automatic adaptation, repair, terminate
  - Alert user for manual intervention
- Support both low-level and high-level sources of knowledge about invariants

Continuing Development

- Develop intelligent expectation build engine
  - Reduce user burden and help novice users
  - Infer expectations from user actions and observed outcomes
  - Refine as the experiment is repeated
  - Offer the inferred scenario to user to label and modify
  - Potential to build a timeline of events/measurements
- Structured expectation templates – combine and integrate groups of low-level expectations, support experiment *classes*
- Develop a library of tools, expectations and measurements for common experiment classes
  - Enable sharing between users
  - Public (populated by us initially) and private archives

Risky Experiment Management -

Experimental Cybersecurity in a Complex World

Domain of interest

- "Malware Containment" ➔
  "Risky Experiment Management"
  - Malware study
  - "Active Defense" research
  - Stress and failure testing
  - Agent based measurement and monitoring
  - …

Problem formulation
"Classical Formulation"

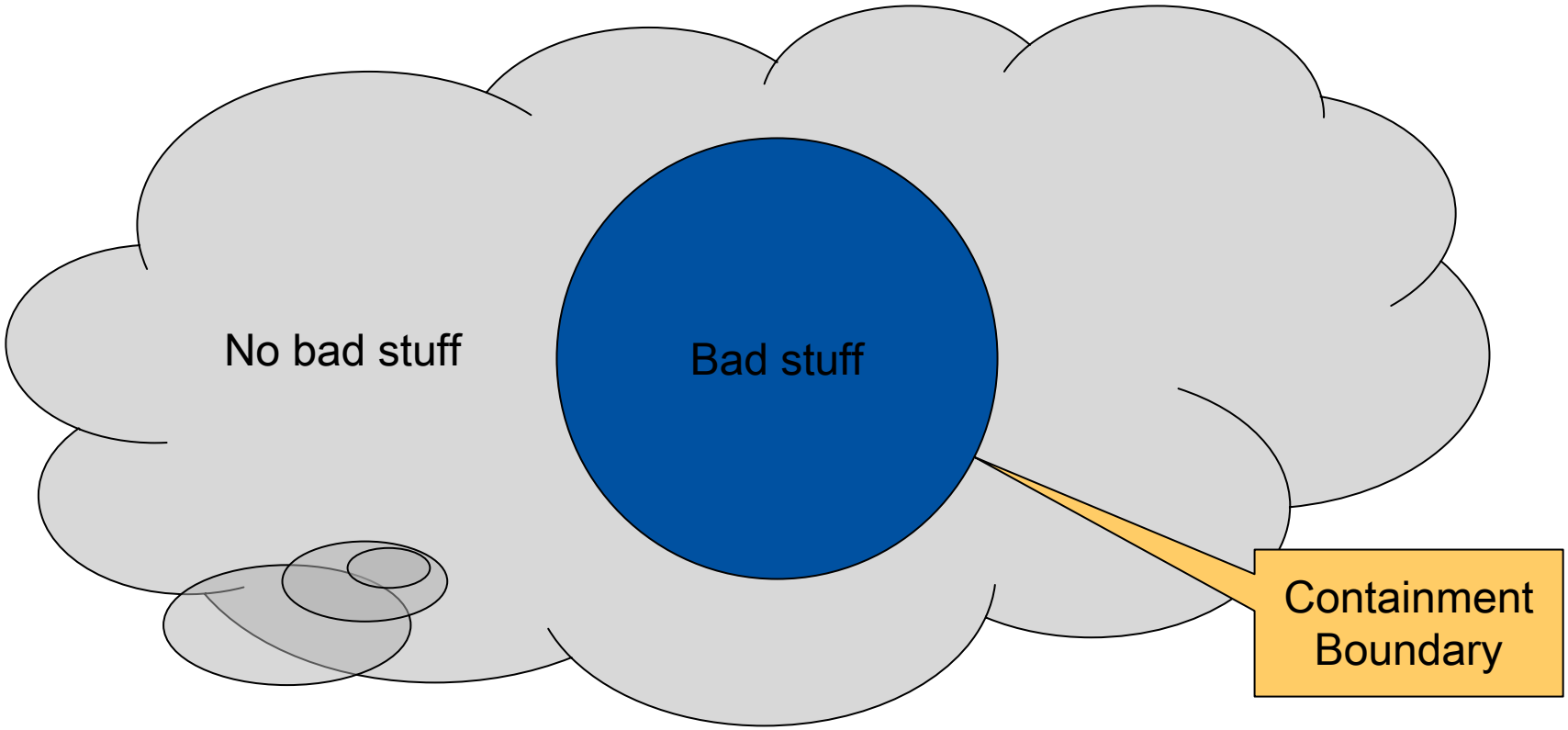

- Focus on isolation
- *De facto* emphasis of initial DETER work

Problem formulation

More accurate formulation

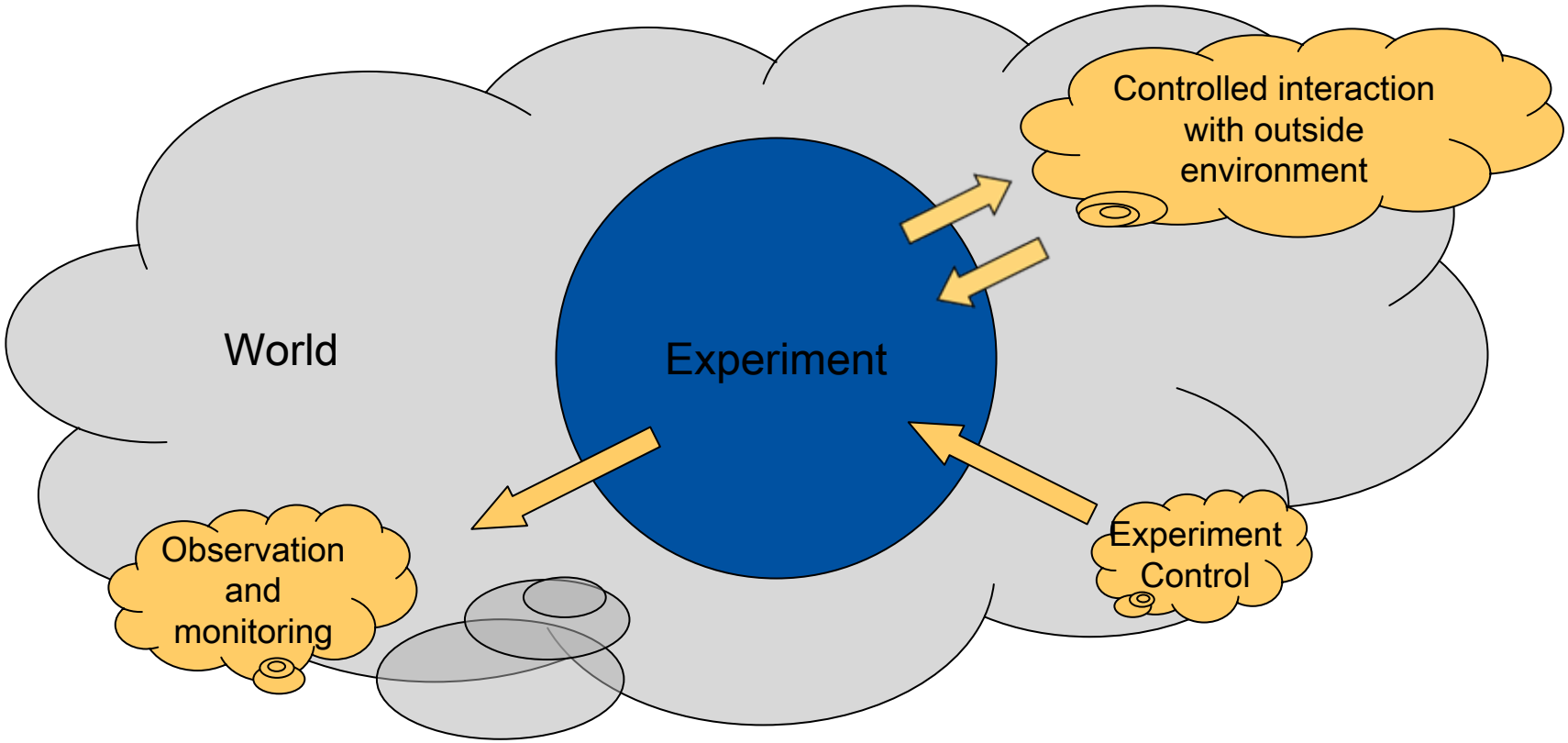

- Key issue:
  - Not “isolation and containment” but “understanding and assurance”

Model

- *Two-stage* approach:

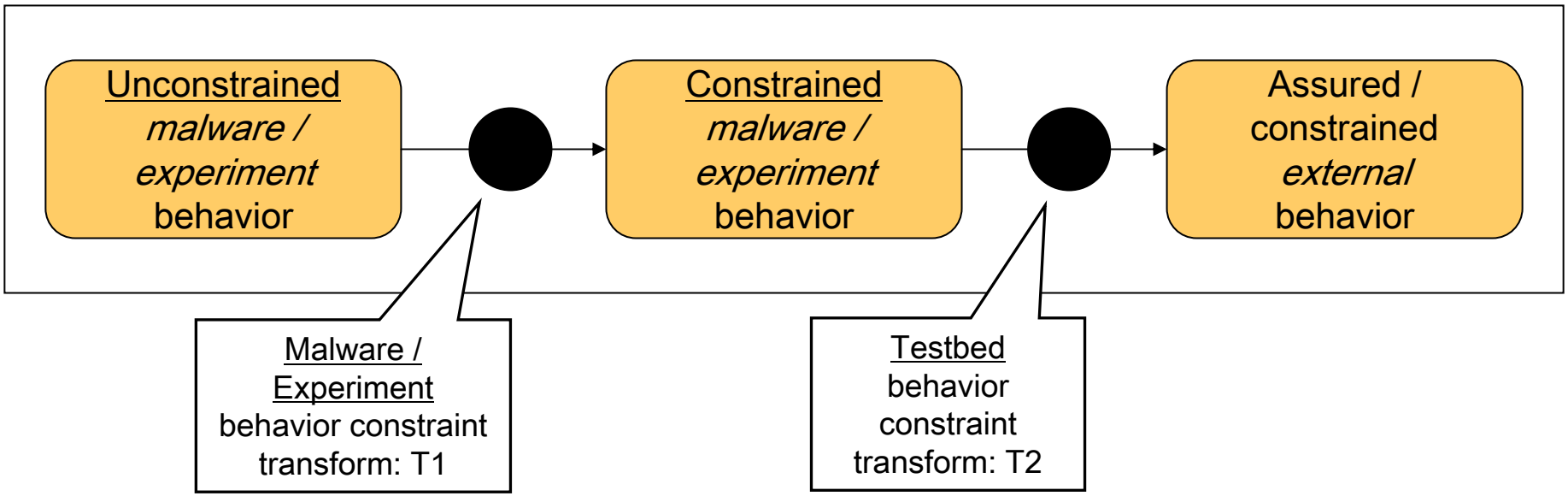

Behavioral composition model: External behavior == T2(T1(experiment))

Why is this a good idea?

- Simplified experiment design, increased reusability
  - Defined T1 “invariants” (experiment constraints) simplify design of experiments with known external properties
- Separation of concerns:
  - Experimenter best equipped to understand impact of constraints on experiment validity - express T1 for experimenters
  - Testbed designer best equipped to understand impact of constraints on testbed and external behavior - express T2 for testbed designers/implementors

Near Term: Constraint sets

- Constraint sets are
  - pre-established sets of T1 constraints that,
  - when met, allow useful, well behaved, well understood experiments to be run.
- It is useful to imagine defining more than one set

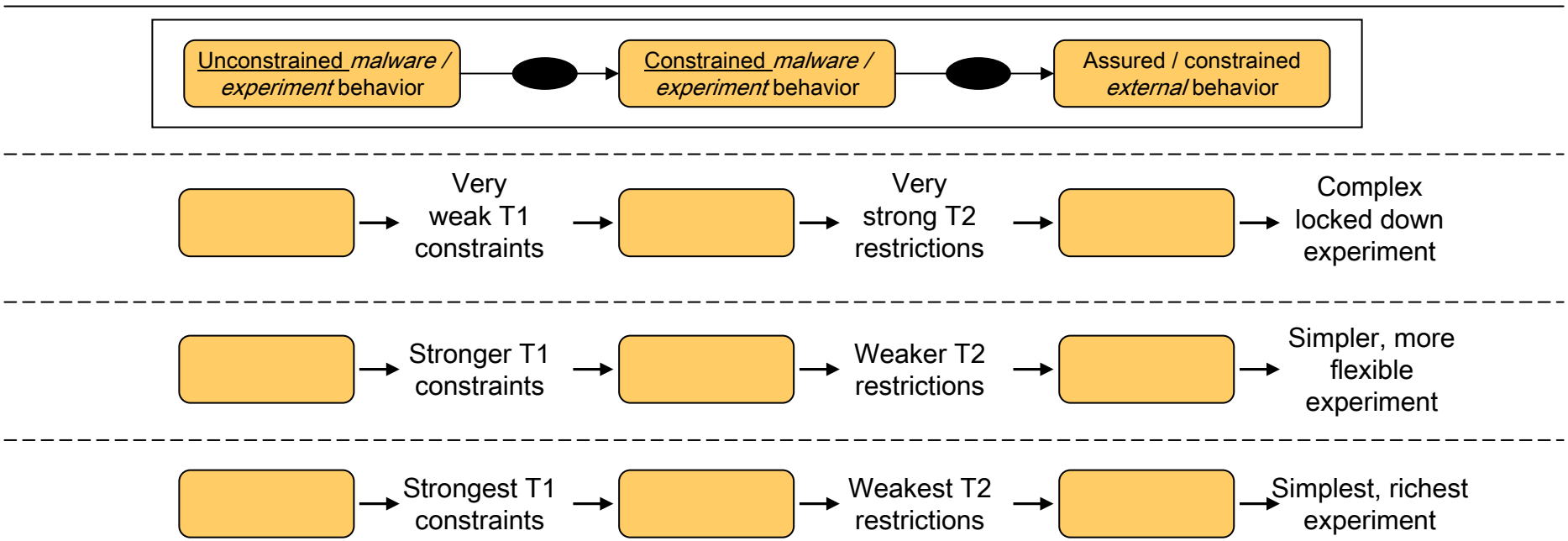

Long Term: Formal Verification

- It may be [in some cases, “is”] possible to reason formally about the overall behavior of the T2(T1)exp)) system.

- This might allow *fine grain,* possibly *automatic* derivation of experiment (T1) and testbed configuration (T2) constraints to limit a particular experiment’s potential external behavior without damaging its experimental value

- Such a tool would provide a highly general facility for *limiting the risk of risky experiments*

A Common Theme

- Interesting to note …
- ... underlying concept of establishing, understanding, monitoring, enforcing experiment/test invariants is *common* to
  - Experiment Health
  - Risky Experiment Management
  - Intelligent, high-level design of experiments
- Direction: *unified*, *shared mechanisms* for invariant management to serve these goals

Summary
DETER Cyber Security Testbed

- Facility
  - Tool libraries, Workbench, Operations, Community
- Tools for Cyber Science
  - Federation, Experiment Health, Risky Experiment
- Foundation for next generation testbeds
  - Geni, National Cyber Range
- More info –

  www.isi.edu/deter *or* www.deterlab.net